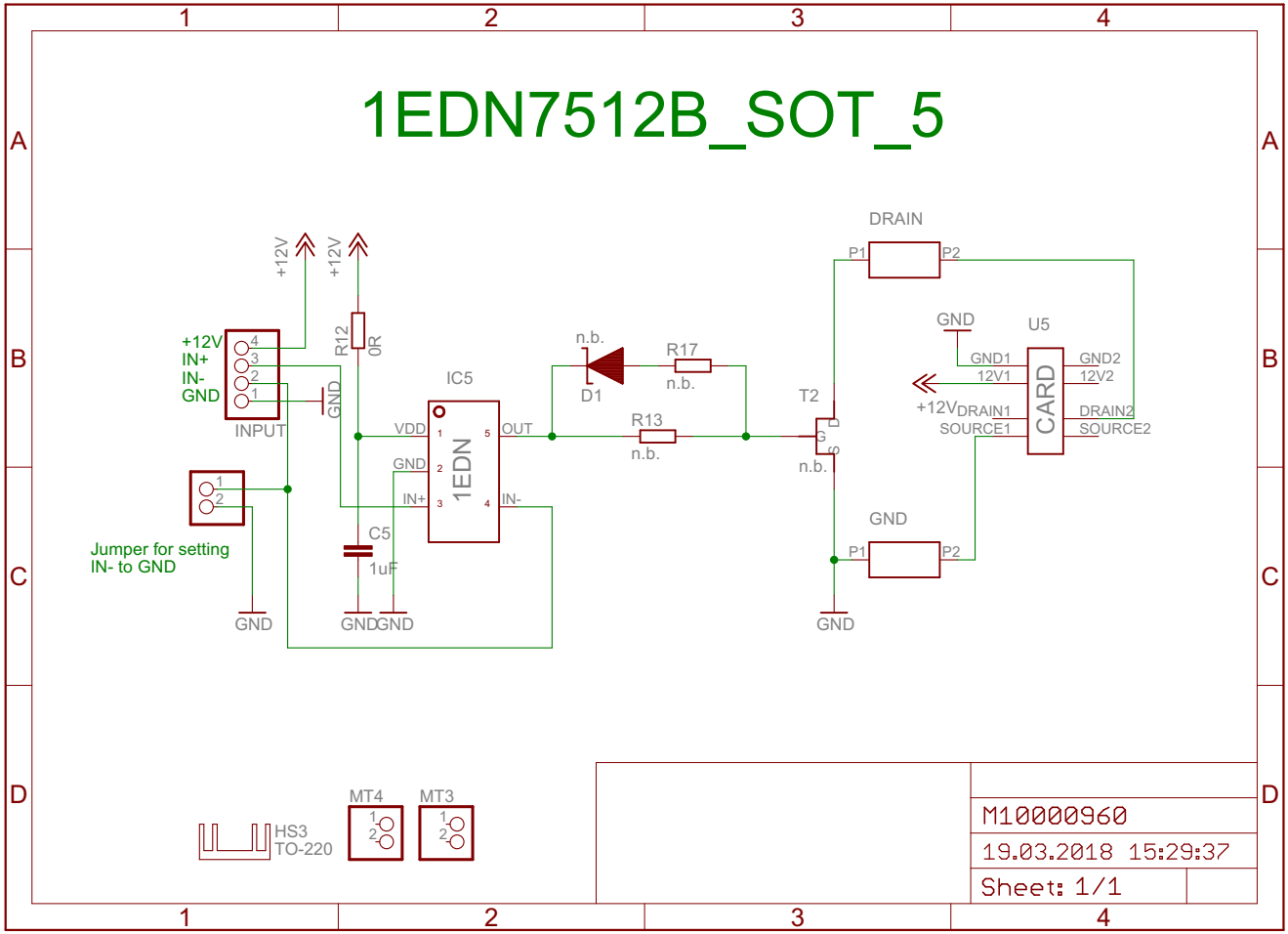
1EDN7512B_SOT_5
+12V
+12V
+12V
IN+
IN-
GND
INPUT
R12
0R
GND
IC5
VDD
GND
IN+
1EDN
OUT
IN-
C5
1uF
GND
GND
GND
Jumper for setting
IN- to GND
n.b.
D1
R17
n.b.
R13
n.b.
T2
n.b.
DRAIN
P1
P2
GND
U5
GND1
12V1
+12V
DRAIN1
SOURCE1
CARD
GND2
12V2
DRAIN2
SOURCE2
GND
P1
P2
GND
HS3
TO-220
MT4
MT3
M10000960
19.03.2018 15:29:37
Sheet: 1/1